REVERSIBLE BRUSHLESS DC RIGHT-ANGLED GEARMOTOR

Model Number:

MMP BL87-435H-120V GRA81-005

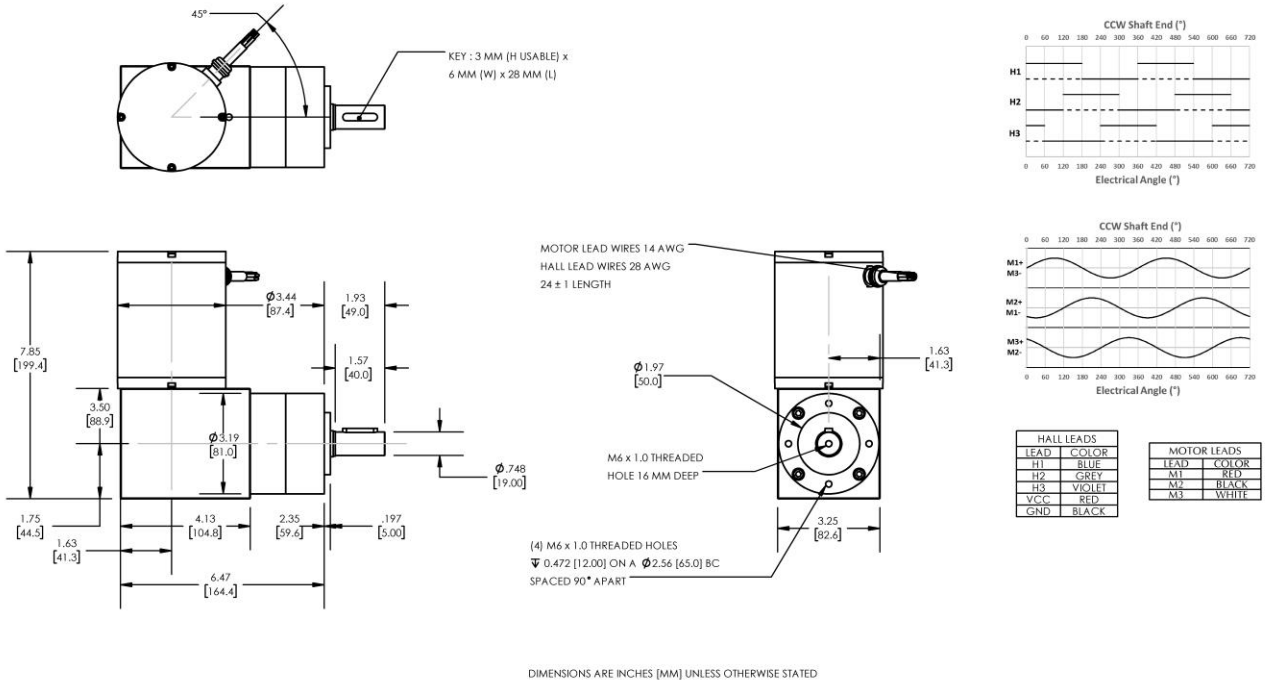

HALL LEADS	
LEAD	COLOR
H1	BLUE
H2	GREY
H3	VIOLET
VCC	RED
GND	BLACK

MOTOR LEADS	
LEAD	COLOR
M1	RED
M2	BLACK
M3	WHITE

PLANETARY GEARMOTOR OUTPUT PARAMETERS:	VALUE	UNITS	TOLERANCE
Gearhead Ratio (exact)	5.18 : 1		
Gearhead Shaft Output Speed (at full-load)	676	RPM	MAX
Gearmotor Rated Continuous Torque	53	In-Lbs	MAX
Gearmotor Rated Peak Torque	187++	In-Lbs	-----
Gearhead Standard Backlash	30	Arc Minutes	MAX
Gearhead Efficiency	80%	-----	-----
Output Shaft Radial Load Capacity	90	Lbs	MAX
Output Shaft Axial Load Capacity	18	Lbs	MAX
Gearmotor Total Weight	15	Lbs	MAX

++ All Peak Torque values are dependent upon duty. Contact our sales office for details.

DC MOTOR PERFORMANCE PARAMETERS:	VALUE	UNITS	TOLERANCE
Rated DC Voltage	120	DC VOLTS	-----
Rated Continuous Current	6.0	AMPERES	-----
No-Load Speed	4396	RPM	MAX
Rated Speed	3500	RPM	+/- 15%
Rated Continuous Power Out	532	WATTS	+/- 15%
Rated Continuous Torque	206	OZ-IN	-----
Peak Torque (motor only)	723	OZ-IN	-----
No-Load Current	0.41	AMPERES	MAX
Back EMF Constant (Ke)	27.3	V/KRPM	+/- 10%
Torque Constant (Kt)	36.9	OZ-IN/AMP	+/- 10%
DC Armature Resistance	4.09	OHMS	+/- 15%
Armature Inductance	2.80	mH	+/- 15%
Armature temperature	155	DEG. C	MAX

NOTES:

- ENCODER & BRAKE OPTIONS AVAILABLE – FOLLOW THIS LINK FOR DETAILS
- NEMA MOUNTING FLANGE OPTION AVAILABLE – FOLLOW THIS LINK FOR DETAILS